INNOVATIONS LIGHTING
CREATIVITY MEETS EVOLUTIONARY DESIGN©

DESIGN COPYRIGHT - 05/20/2025
ALL RIGHTS RESERVED AND MAY NOT BE DUPLICATED WITHOUT OUR WRITTEN PERMISSION

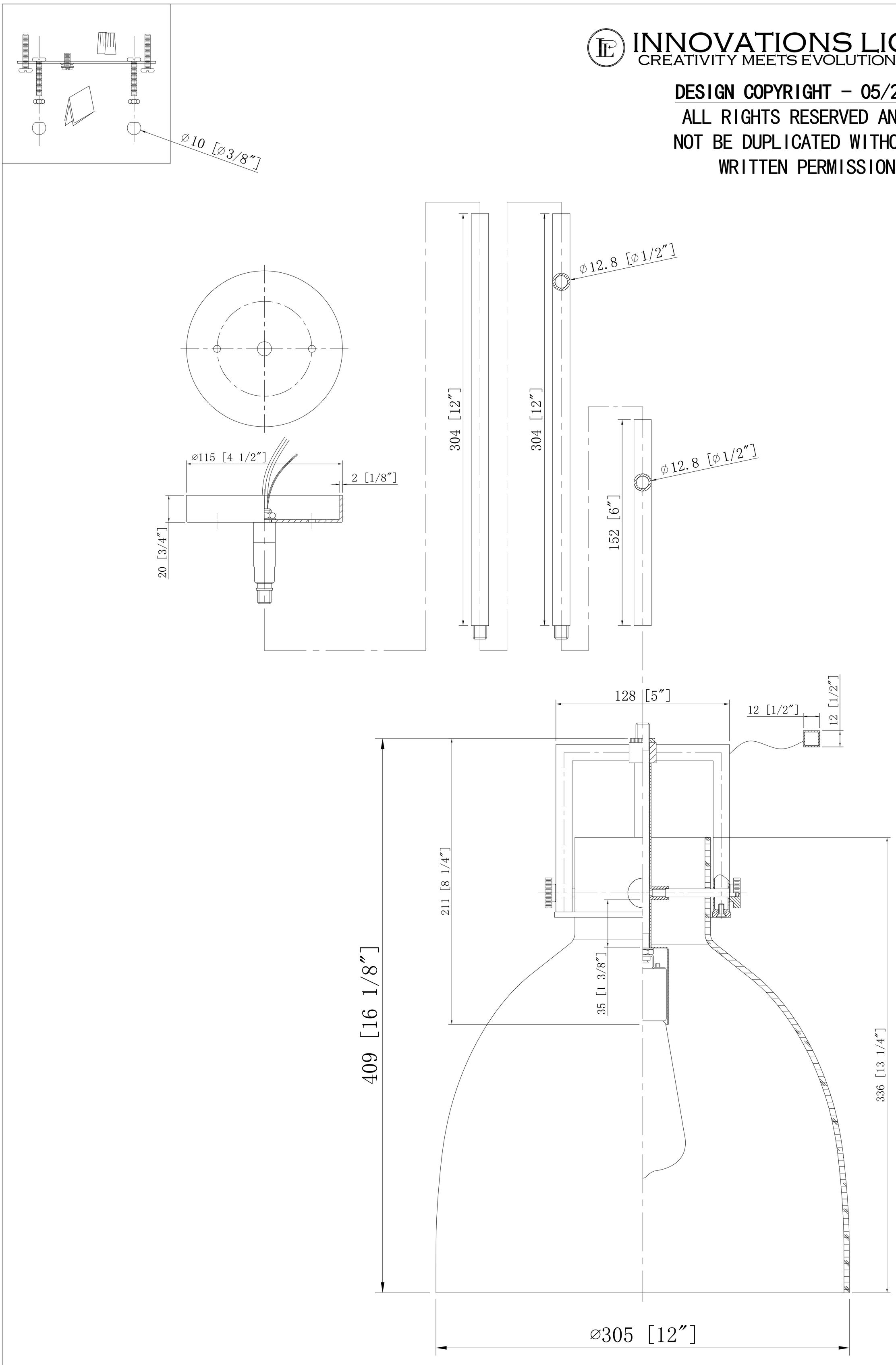

ITEM: 411-1SM-G412-12