ACCORD LIGHTING

Specifier: _____ Date: _____

Project name: _____

Project location: _____

5134LED (LED)

Name: Squares Accord Ceiling Mounted 5134 LED
Collection: Squares
Application: Ceiling
Construction: Brass,Natural Wood Venner, MDF and Acrylic

Specifications

Light Source:	Integrated LED Module
Driver Location	Inside the luminaire
Color Temperature:	3000K, 3500K or 4000K
Dimming Option:	0-10V, ELV/TRIAC
CRI:	90
Delivered Lumens:	3300 lm
Total Power:	48 W
Input Voltage:	120V - 277V
Input Frequency:	60 Hz
Canopy Dimension	N/A
Height Adjustment Limit:	N/A
Weight:	N/A

Fixture Image

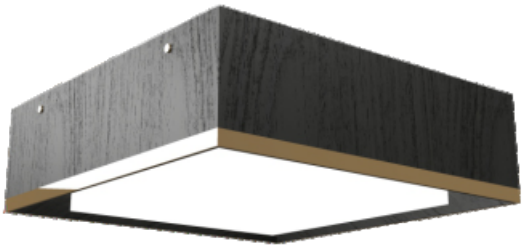

Technical Drawing

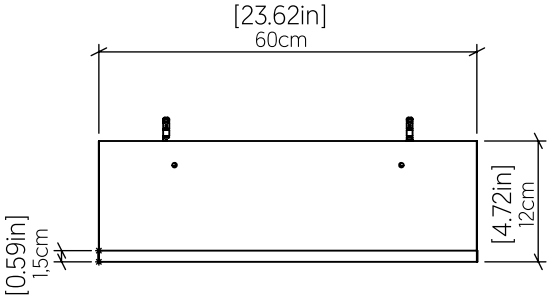

Photometric Graph

Coming Soon!

Standards

c UL us
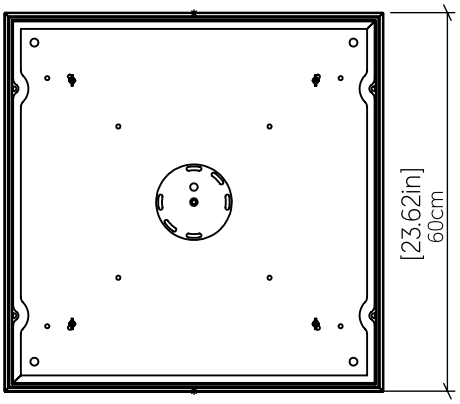
DAMP LOCATION