ACCORD LIGHTING

Specifier: _____ Date: _____

Project name: _____

Project location: _____

1546 [E26]

Name:	Oyster Accord Pendant 1546
Collection:	Oyster
Application:	Pendant
Construction:	Natural Wood Veneer, MDF

Specifications

Light Source:	1X 25W 120V-240V E26
Driver Location	N/A
Color Temperature:	Lamp Dependent
Dimming Option:	Lamp Dependent
CRI:	Lamp Dependent
Delivered Lumens:	Lamp Dependent
Total Power:	Lamp Dependent
Input Voltage:	120V - 240V
Input Frequency:	60 Hz
Canopy Dimension	H0.8cm Ø13,5cm / H0.31" Ø5.31"
Height Adjustment Limit:	10'
Lamp Type:	E-26 A19
Standard:	Metal rod in Matte Black

Fixture Image

Technical Drawing

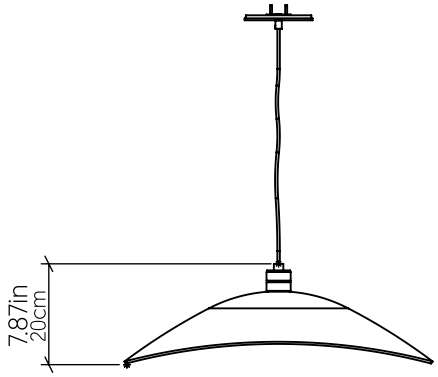

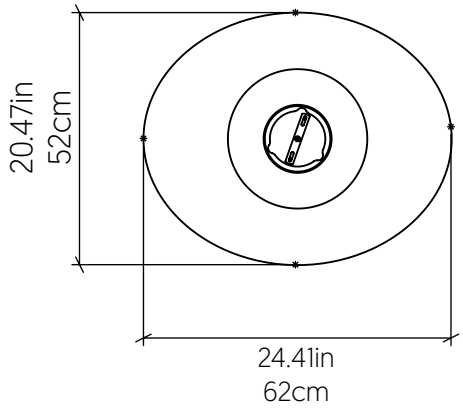

Photometric Graph

Coming Soon!

Standards

c UL us

DAMP LOCATION